Hillmar
Hillmar Industries Ltd.
7371 Vantage Way
Delta, BC V4G 1C9
P:604 946-7115 F:604 946-0329
info@hillmar.com www.hillmar.com

THRUSTER DB M37
TDB-M37-0800-30-301-120-24400
SPECIFICATION SHEET
SLS & MKTG
ENGLISH

Sheet Number:			
Job Number:			
Form Number: 429-376-65592PT			
Company / Project Reference:	Date.:	Page.: 1 OF 1	Document Package No.: / Rev.:

Inventor Drawing

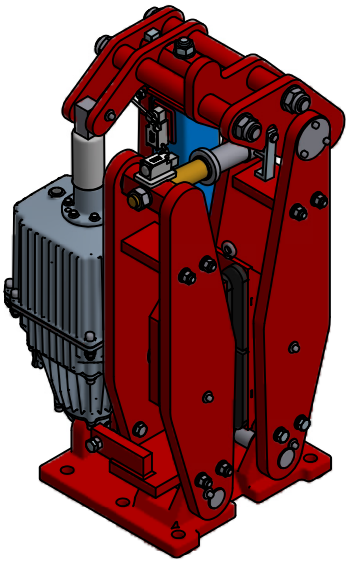

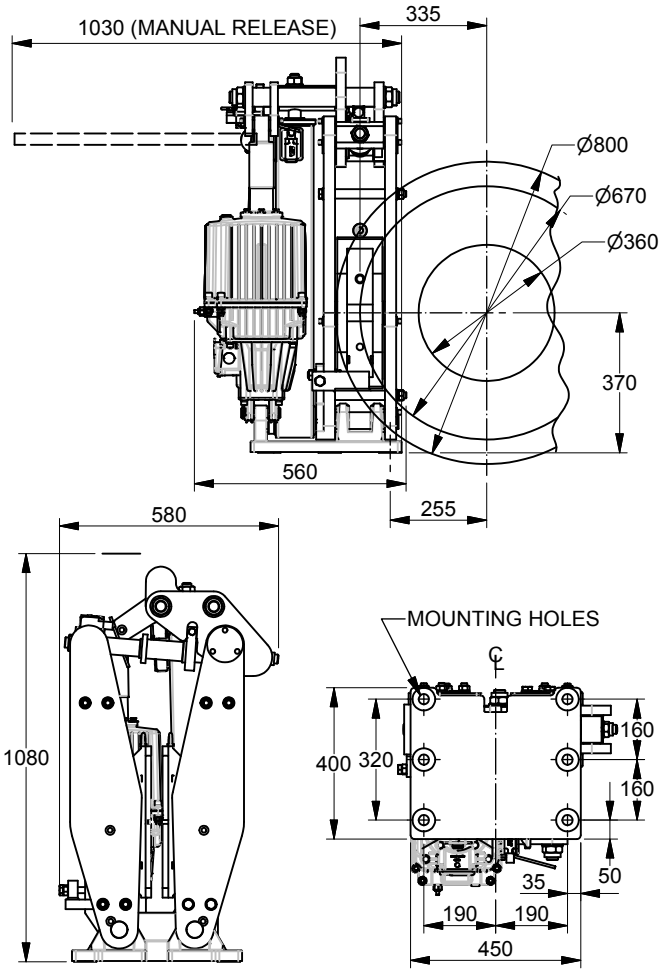

FEATURE	CODE
Thruster disc brake	TDB
Disc brake size	MD38
Disc OD (mm)	0800
Disc thickness (mm)	30
Thruster size	301
Thruster stroke (mm)	120
Braking capacity (Nm)	24400

Example for ordering	TDB-MD38-0800-30-301-120-24400

TECHNICAL DATA

Max. braking torque, μ=0.4 static (Nm)	24380
Max. braking torque, μ=0.35 dynamic (Nm)	21340
Maximum coupling hub diameter (mm)	360
Disc OD (mm)	800
Disc thickness (mm)	30
Max. contact force Fc (N)	91000
Temperature range (°C)	-20 to +70
Mounting holes	6 x Ø27
Mounting bolts	6 x M24
Pad area (each pad) (cm^2)	360
Maximum allowable pad wear (mm)	10
Weight of brake (no thruster) (kg)	235
Weight of brake (with thruster) (kg)	275
Standard painting color CARMINE RED	RAL #3002

NOMINAL SPECIFICATION

All brakes come standard with self centring mechanism, manual release mechanism, automatic adjuster, proximity switch to indicate break release.

Brakes are bulit to same handing as shown

NOTES

All figures are nominal figures only

All dimensions are in millimeters

Document Template #710-101-62058

** ALL TECHNICAL DATA IS SUBJECT TO CHANGE WITHOUT NOTICE **
Hillmar works have a fully registered ISO 9001-2008 quality assurance programme (QCB #01-1525)

C:\TEMP\d4b451ba-8fc4-470d-a971-9e9b271cc12c\8000053071 4\HILLMAR\HILLMAR PRODUCTION\04 THRUSTER DB\0700-4\07004001 TDB-MD\SPC-SHT-TDB-MD\65592 TDB-M37-0800-30-301-120-24400.idw